Typical Node on 220 or 440 MHz

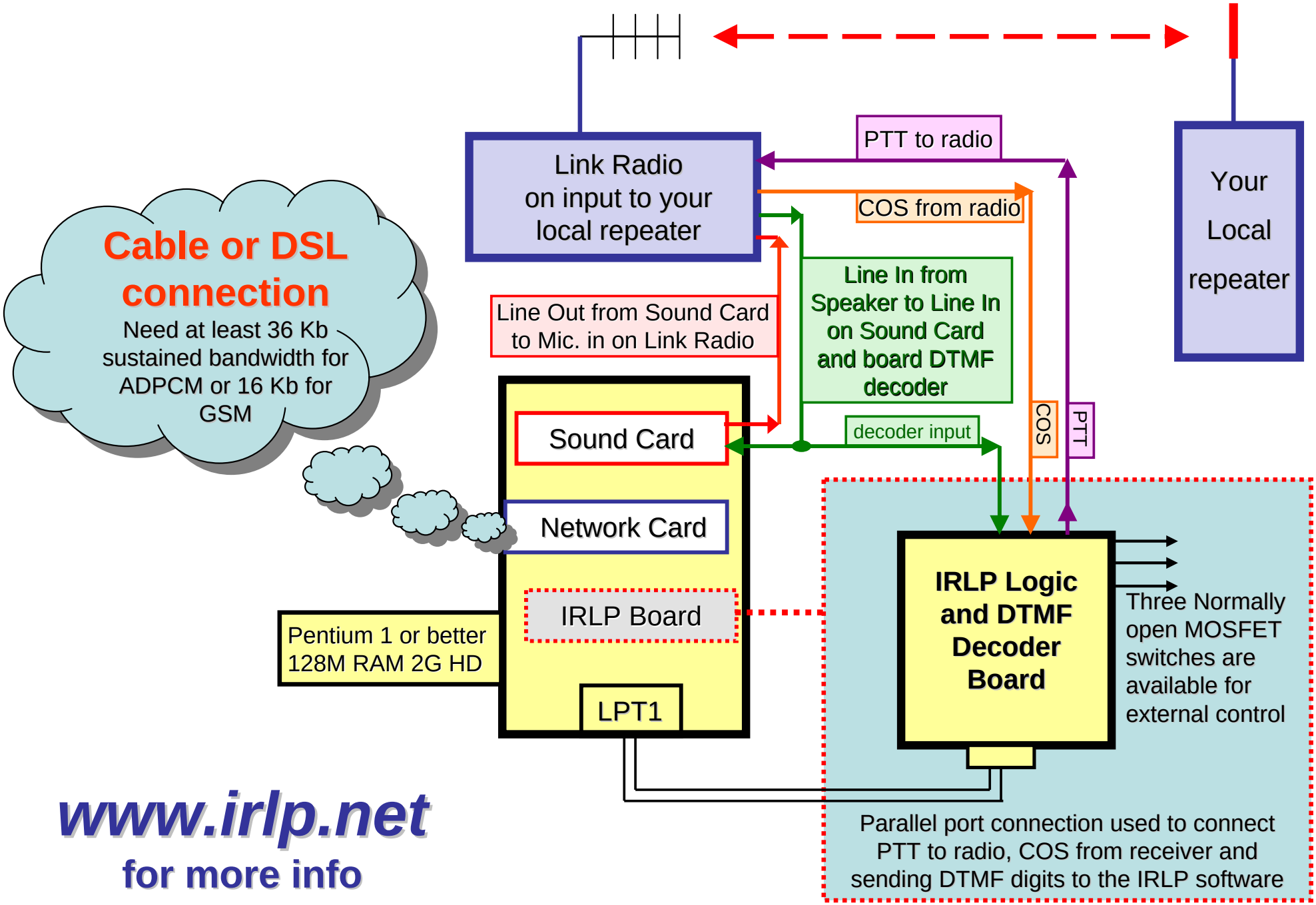

www.irlp.net

for more info

Paul Cassel VE3SY